ABLOY® LEAD COVERS

EA280/EA281

APPLICATIONS

The ABLOY lead cover is designed to ensure the unbroken transfer of cable between the door and the frame. The maximum diameter of the cable is 7,5 mm and it is recommended to use multicore cable because of its increased bending strength.
When the opening angle of the door is more than 120° or the distance between the hinge and the door frame is more than 20 mm, the long lead cover EA281 should be used.

DIMENSIONS

EA280

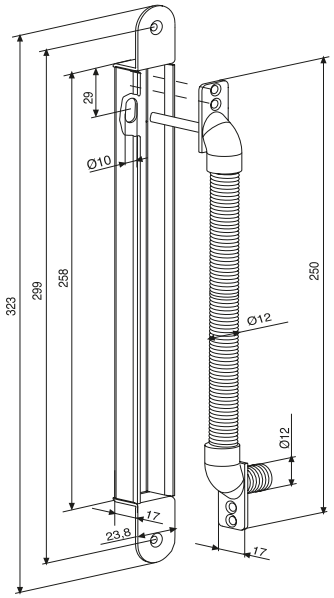

EA281

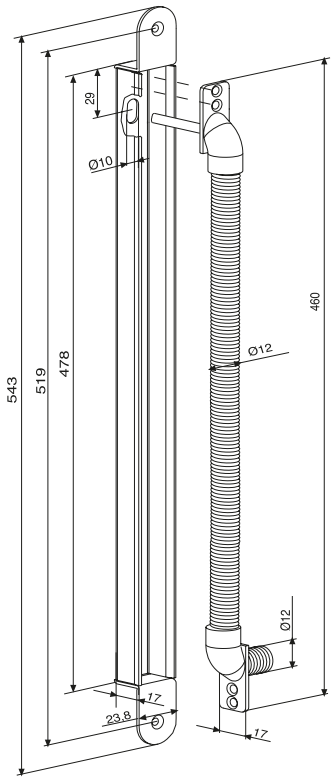

DRILLING AND FITTING INSTRUCTIONS

The ABLOY lead cover is usually fitted in the door, but when there is not enough space available, it can be fitted to the frame as well. Before fitting, the cable must be passed through the door. The hole for the cable must be wide enough to allow some movement for the wires.

CONSTRUCTION

Housing	steel
Flexible tube	steel

FINISH

Bright Chrome

Abloy develops continuously the products and solutions offered. Therefore, the information contained in the marketing materials is subject to change without notice.

ABLOY®

ABLOY secures people, property, and business operations on land, at sea, and in the air – in all circumstances.

ASSA ABLOY is the global leader in door opening solutions, dedicated to satisfying end-user needs for security, safety and convenience.

MANUFACTURER:

Abloy Oy

An ASSA ABLOY Group brand ASSA ABLOY

8801068 10/2014 x000 kpl PunaMusta, Joensuu